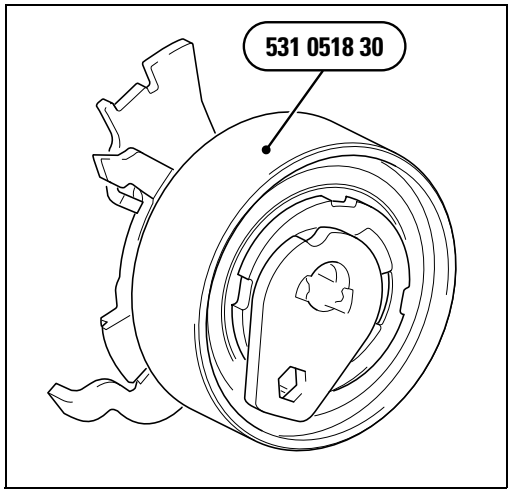

1

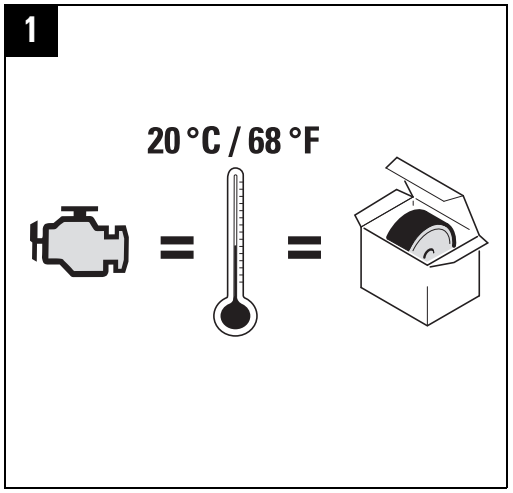

2

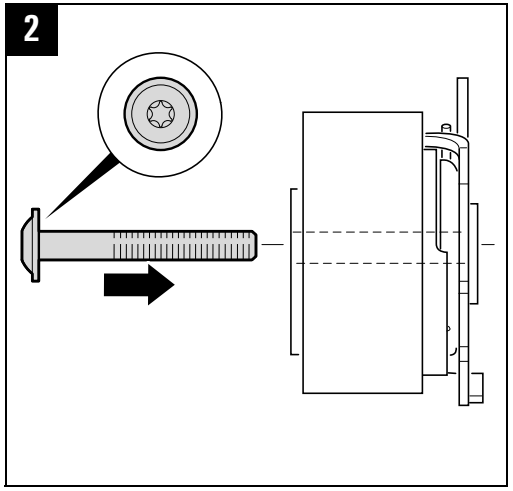

3

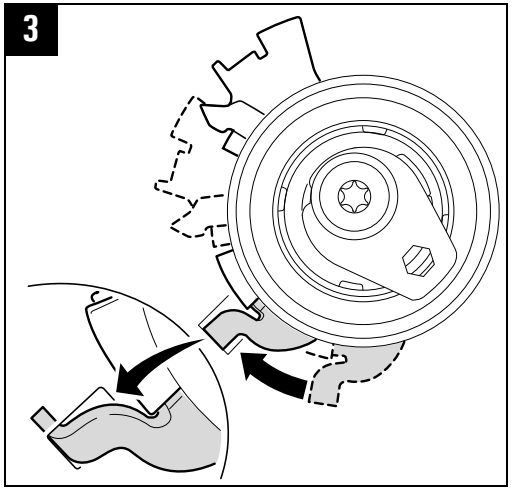

SERVICE

4

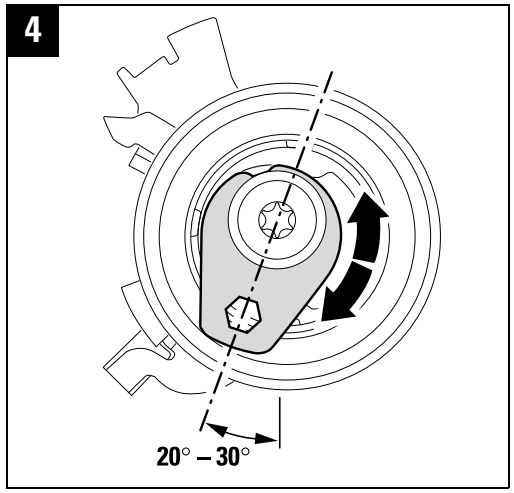

5

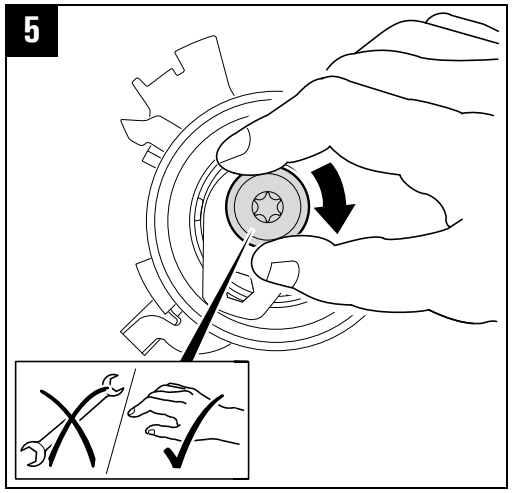

6

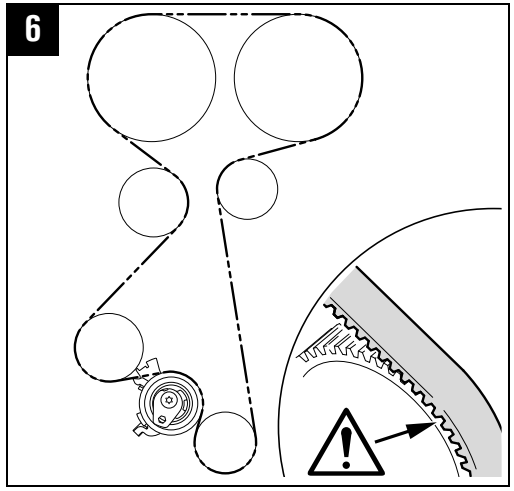

7

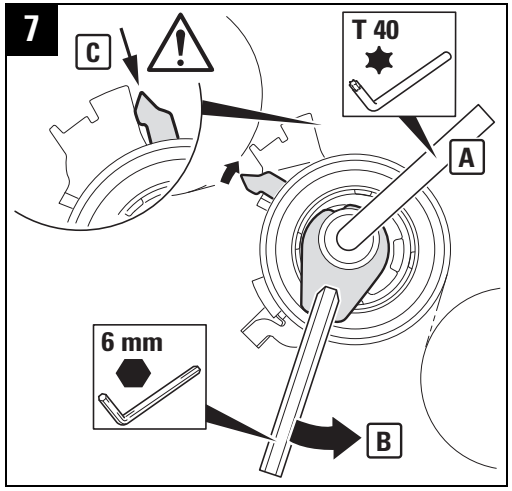

999 6004 640 © 2013 www.schaeffler-aftermarket.com

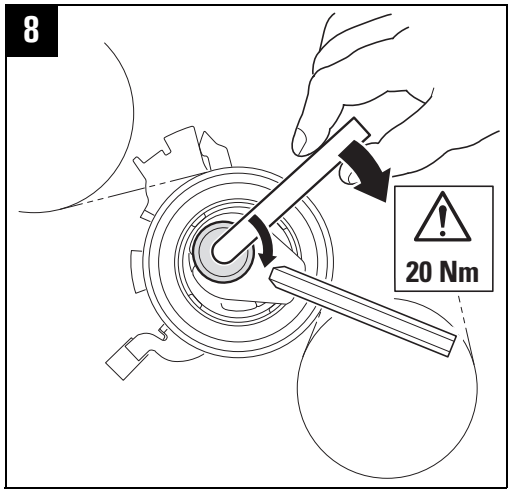

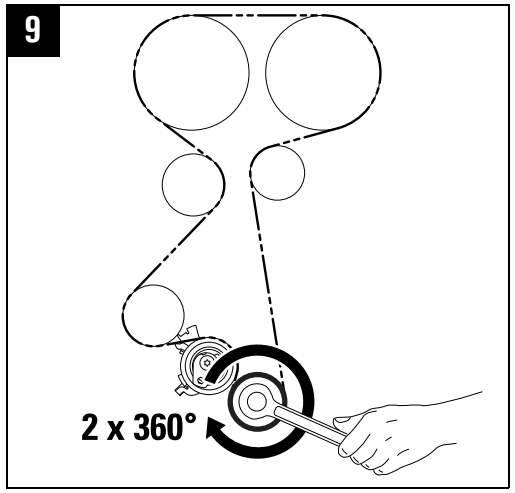

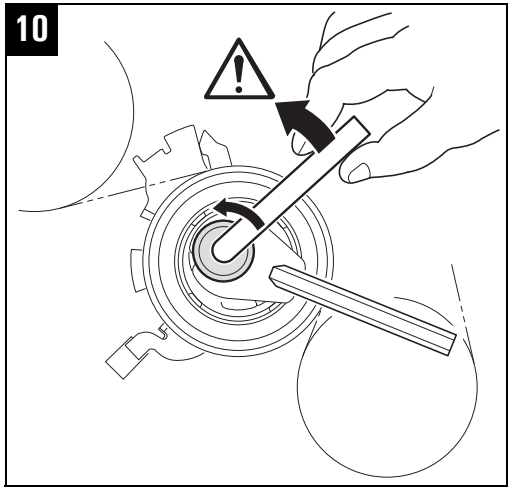

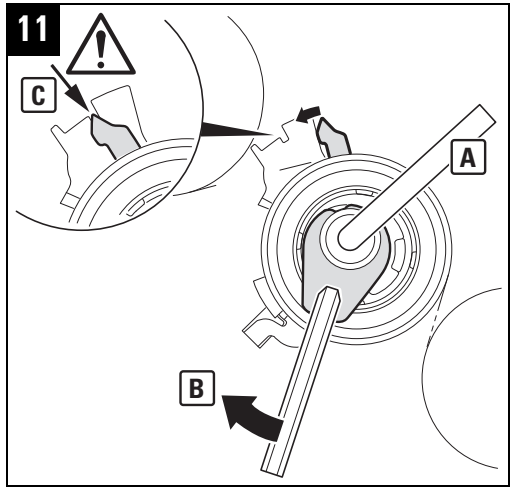
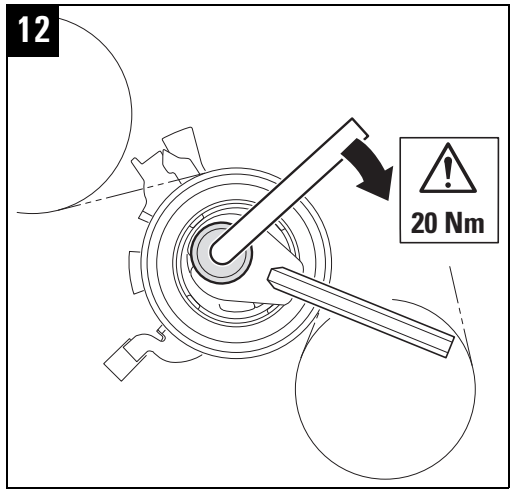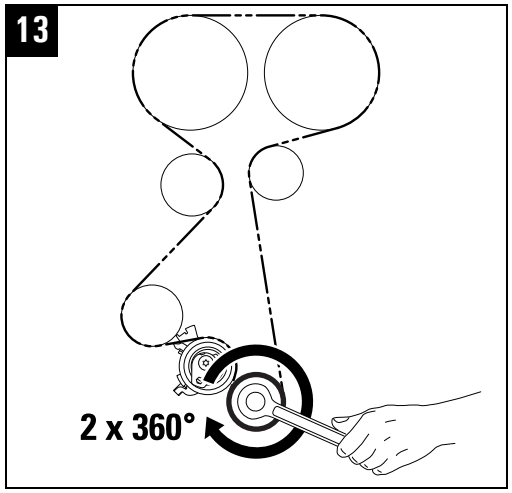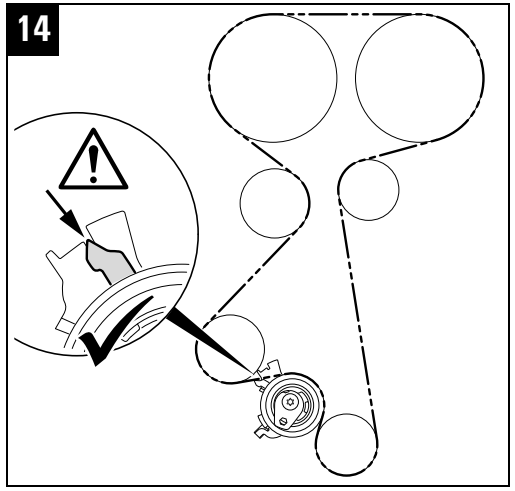
SERVICE